AIRVOLUTION INSTALLATION MANUAL

TABLE OF CONTENTS

CAUTION & SAFETY

This appliance can be used by children aged from 8 years and above and persons with reduced physical, sensory or mental capabilities or lack of experience and knowledge if they have been given supervision or instruction concerning use of the appliance in a safe way and understand the hazards involved.

Children shall not play with the appliance.

Cleaning and user maintenance shall not be made by children without supervision.

  Toll Free: 866 668 3247 Fax: 909 890 2313 www.macroairfans.com

CAUTION & SAFETY

READ THE ENTIRE MANUAL BEFORE OPERATING THE FAN. Ensure that all safety practices and instructions are followed during the installation, operation and servicing of the fan. Failure to apply these safety practices could result in death or serious injury. If you do not understand the instructions please call our Technical department for guidance.

The fan installation should follow the recommendations outlined in this manual. MacroAir is not responsible for any injury or damage to people or property as a result of not complying with the recommendations outlined in this manual.

IMPROPER ELECTRICAL INSTALLATION CAN CAUSE DAMAGE TO THE FAN AND INTERFERE WITH OTHER ELECTRONIC EQUIPMENT. IN ADDITION TO STANDARD ELECTRICAL SAFETY CONSIDERATIONS, PLEASE OBSERVE THE FOLLOWING:

- THE WIRING FROM THE CONTROL PANEL TO THE FAN MOTOR MUST BE MACROAIR-SUPPLIED SHEILDED CABLE.
- SEPARATE INCOMING POWER AND MOTOR CONTROL CABLES BY A MINIMUM OF (6) INCHES.
- RUN WIRING FOR EACH FAN SEPARATELY.
- DO NOT ATTEMPT TO CONTROL MULTIPLE FANS WITH ONE CONTROL PANEL.
- ALWAYS GROUND PROPERLY. CONNECT THE SUPPLIED CABLE GLANDS TO EACH END OF THE MOTOR CONTROL CABLE AND TIGHTEN THEM SECURELY AT BOTH THE FAN MOTOR AND CONTROL PANEL ENDS. CONNECT THE GROUND BAR IN THE CONTROL PANEL TO GROUND AT THE MAIN BREAKER BOX.
- PLEASE REFER TO THE INSTALLATION INSTRUCTIONS FOR MORE INFORMATION.

All fan controls should only be installed by qualified technicians familiar with the requirements of the NEC and local codes. Refer to appropriate portions of this manual for other important requirements. Failure to follow these guidelines will void the manufacturer's warranty.

NOTICE:

All electrical controls are configured at the factory and are ready to use. No user adjustments are available. Follow the included wiring schematics and installation instructions when installing this device to ensure proper operation. Do not make any changes to any part of the motor control panel without first consulting MacroAir.

Installation is to be in accordance with the national electrical code, ANSI/NFPA 70-1999 and local codes.

⚠ DANGER

HAZARD OF ELECTRIC SHOCK, EXPLOSION, OR ARC FLASH

Read and understand this manual before installing or operating a fan unit. Installation, adjustment, repair, maintenance must be performed by qualified personnel.

The user is responsible for compliance with all international and national electrical code requirements with respect to grounding of all equipment.

Many of the parts of this unit operate at line voltage. DO NOT TOUCH.

Install all covers before applying power or starting and stopping the unit.

⚠ WARNING

DAMAGED EQUIPMENT

Do not operate or install any fans or fan accessories that appear to be damaged.

Failure to follow this instruction can result in death, serious injury, or equipment damage.

MAINTENANCE AND SERVICE:

If the fan does not operate properly using the procedures in this manual, BE CERTAIN TO REMOVE ALL POWER TO THE UNIT and contact our technical department for futher assistance.

Keep all body parts clear of moving part at all times.

All electrical troubleshooting and repair must be done by a qualified technician and meet all applicable codes.

CAUTION & SAFETY

Key Safety System Components

MacroAir fans are engineered with key safety features to prevent pieces of the fan from falling in the unlikely event of a catastrophic failure. Used together, these systems and devices provide comprehensive protection of people, equipment and property. Follow the detailed instructions precisely when installing fans, including the following:

Install safety cable on EVERY fan. Install guy wires on every fan, unless otherwise specified. Properly installing the guy wires will keep the fan stable in case of earthquake or in "outdoor" installations where high wind conditions may occur. The safety cable, if installed per MacroAir specifications, will prevent the fan from falling in the unlikely event that the mounting system should fail. A MacroAir fan should never be run without a properly installed safety cable, which is supplied with every fan along with all required hardware. You must install a safety cable for the warranty to be in effect.

Install the complete set of extended blade safety links, which connect each blade to the adjacent blades and reinforce the area between the mounting holes. This is an important precautionary measure which will help prevent a blade from falling should one break off at the hub for any reason.

Mark the Floor to Alert Personnel

When mounting a fan in an area where materials may be elevated into its path, MacroAir recommends marking or painting the floor with a large crosshatched circle to alert personnel of the overhead location of fans.

Weight Considerations

We recommend that a building structure be capable of holding approximately twice the stated hanging weight of the fan. If there is some doubt of this, a professional contractor or architect should perform a thorough evaluation of the building prior to purchasing the fans. MacroAir provides guidelines for mounting fans; however, it is the sole responsibility of the building owner and installer to ensure the safety of the mounting system, that the building structure is sound and that the installation complies with all federal, state, and local codes.

Torque

The maximum torque (twisting force) that must be handled by the mounting system, including the building structure, occurs at fan startup. For a 24 foot fan, maximum potential starting torque is 300 Ft-Lbs. When standard electrical controls are installed, the fan will never begin to approach this maximum because the standard variable-speed control system uses the soft-start technology. However, should the soft-start fail, or when a fan is installed as a single-speed model without the variable speed control system (rare), full torque might be applied to the mounting system, so it is important that it be adequate to withstand 300 Ft-Lbs torque.

Check Federal, State, and Local Codes

Check all relevant codes to make sure that all product certifications, product listings, and building regulations are met. Code compliance is the responsibility of the installer.

FAN PLACEMENT - GENERAL INFORMATION

Sprinkler Systems and Fan Placement

In any installation where fire sprinklers are in place, do not interfere with their correct operation. Fans should be located no less than 3 feet below a sprinkler, and placed central to each sprinkler quadrant. Our standard variable-speed control system can be connected to a fire suppression control system, which will emergency-stop fans in case of fire. Prior to installing fans, review all codes applicable to sprinkler systems and fans to ensure code compliance. Refer to the wiring diagrams packaged inside the control panel for proper installation. If further advice is needed, you may contact our support staff. However, it is your sole responsibility to see that the installation is completed to code and that it is correct.

Other Information on Placement and Spacing

If possible, avoid mounting fans directly below lights or skylights to avoid any strobe effect caused by moving blades. Note, a large fan, 20 – 24 feet in diameter, performs best at 20 to 30 feet above the floor, but acceptable performance has been demonstrated as low as 10 feet and as high as 50 feet.

If the building has a mezzanine, fans should be mounted so a person can not reach a fan in any way from the upper level/deck. Make certain that fans are positioned to that the blade tips are at least 3 feet away from any area where a person may be able to extend outward to reach them.

FAN CLEARANCE & PLACEMENT

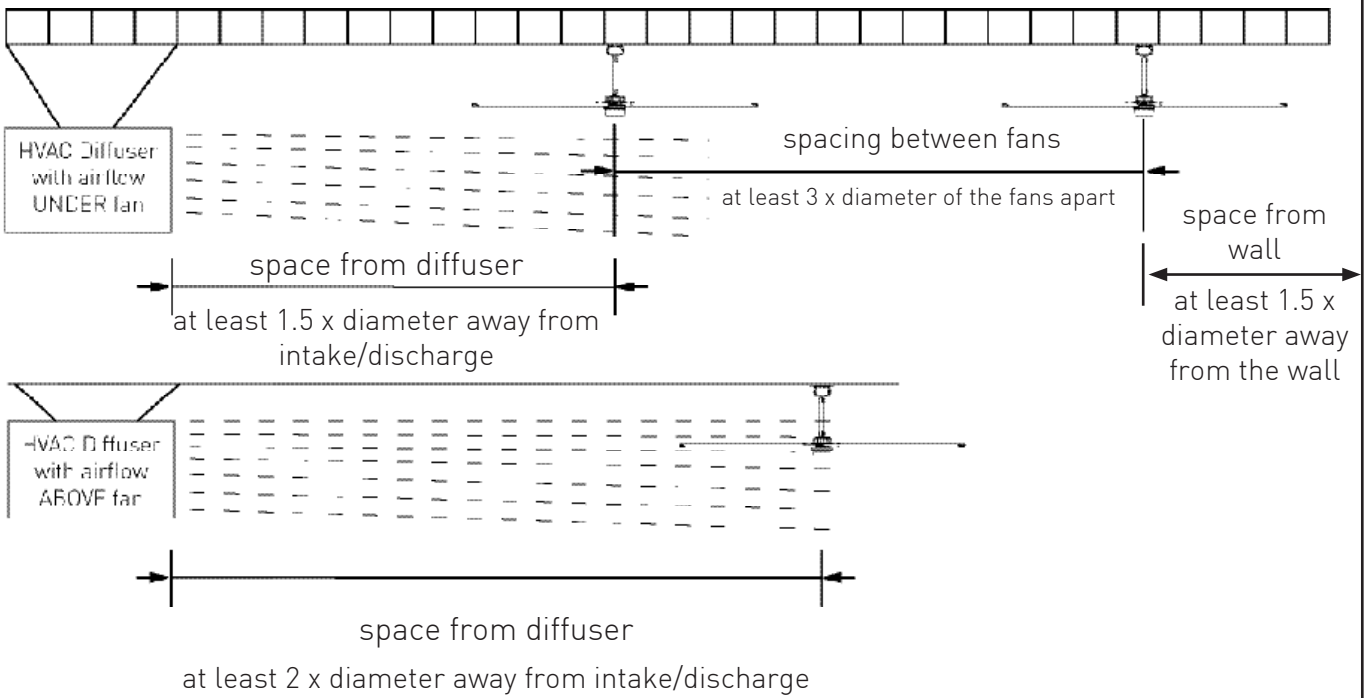

  Toll Free: 866 668 3247 Fax: 909 890 2313 www.macroairfans.com Rev. Date 030218

MacroAir engineers of air™

FAN CLEARANCE & PLACEMENT

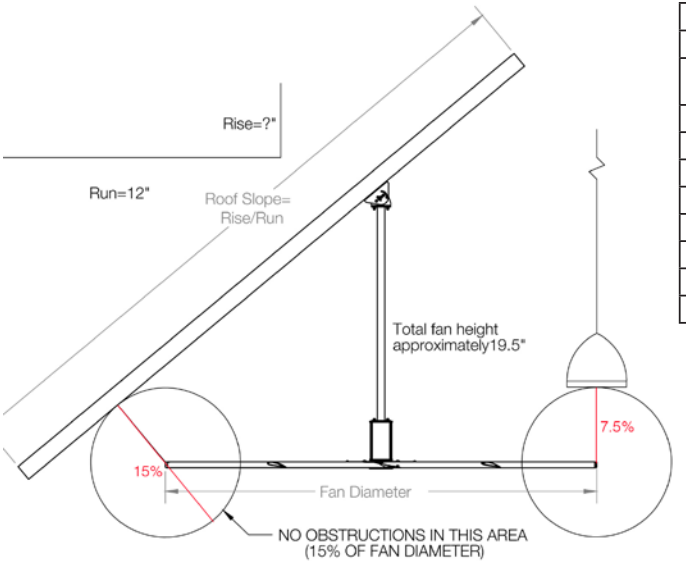

Slope (in)	2/12	4/12	6/12	8/12	10/12	
Roof Angle	9.5°	18.4°	26.6°	33.7°	39.8°	
Diameter	Recommended Extension Length					Clearance Radius
8 feet	N/A	N/A	1	1	2	7"
10 feet	N/A	1	1	2	3	9"
12 feet	N/A	1	2	3	4	11"
14 feet	1	2	3	4	5	13"
16 feet	1	3	4	5	7	14"
18 feet	2	3	5	6	8	16"
20 feet	2	4	5	7	9	18"
24 feet	3	5	7	9	11	22"

WARNING: FANS ARE NOT MEANT TO BE OPERATED IN WINDY CONDITIONS.

The minimum distance of a fan to a wall or similar obstruction should be no less than 1.5 times the diameter of the fan.

The goal of this diagram is to determine the proper extension length to maintain a minimum blade clearance of 15% of the fan's diameter. The extension lengths above are minimum recommendations only, based solely on roof pitch and fan diameter. Other factors must be evaluated when determining extension requirements. In addition, MacroAir strongly recommends that the fan blades must be a minimum of 10 feet (3.05 meters) above the floor. Contact us for assistance with fan placement and extension selection (contact information can be found on page 36).

FAN DIMENSIONS

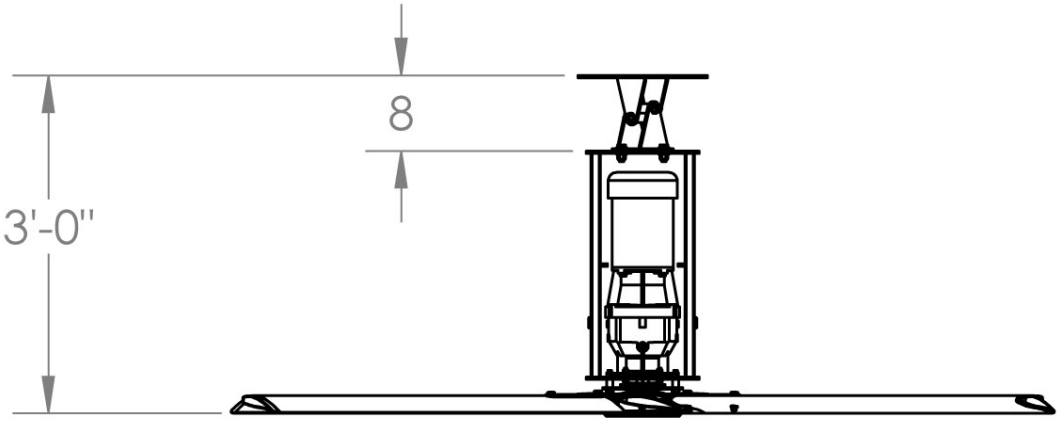

Dimensions listed above are applicable to all AirVolution fans.

  Toll Free: 866 668 3247 Fax: 909 890 2313 www.macroairfans.com Rev. Date 030218

FAN COMPONENTS

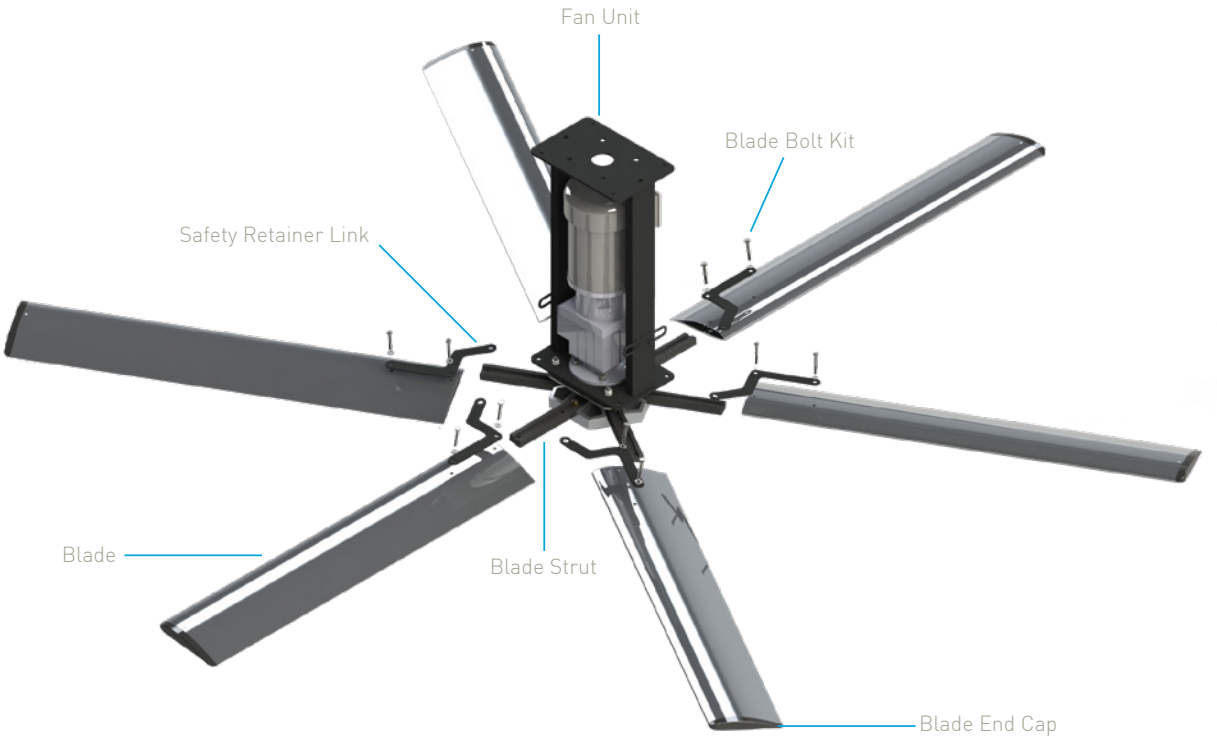

UNIVERSAL MOUNT & COMPONENTS

Universal Mount Extension (Optional)

Top Plate Bolt Kit

I-Beam Clamps & Shims

Mount Bolt Kit & Safety Cable

Guy Wire Cables

Universal Mount

Glulam Brackets (Optional)

  Toll Free: 866 668 3247 Fax: 909 890 2313 www.macroairfans.com Rev. Date 030218

MacroAir engineers of air™

CONTROL PANEL & COMPONENTS

CAT5E Shielded Cable

Motor Cable

Digital Touchpad Remote

Control Panel

Motor Cable Gland
(Installed by Customer)

Analog Remote (Optional)

FAN MOUNTING

  Toll Free: 866 668 3247 Fax: 909 890 2313 www.macroairfans.com

INSTALLATION OVERVIEW - I-BEAM/STEEL TRUSS

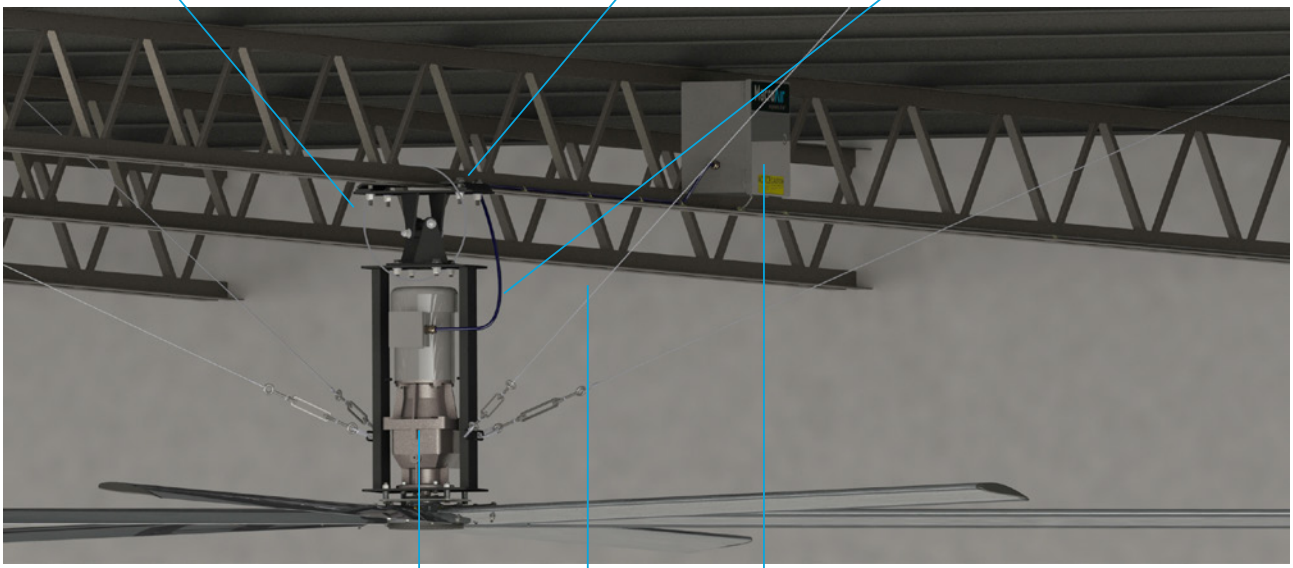

I-BEAM/STEEL TRUSS UNIVERSAL MOUNT

- Attach the I-beam clamps to the top of the Universal Mount with the provided hardware pack.
- Clamp the Universal Mount to the I-beam.
- Attach the extension to the bottom of the Universal Mount and attach the top of the fan unit to the bottom of the extension with the provided hardware pack.
- Mounting to Purlins is not allowed, for application with Purlins please consult a structual engineer.

  Toll Free: 866 668 3247 Fax: 909 890 2313 www.macroairfans.com Rev. Date 030218

I-BEAM/STEEL TRUSS UNIVERSAL MOUNT (cont.)

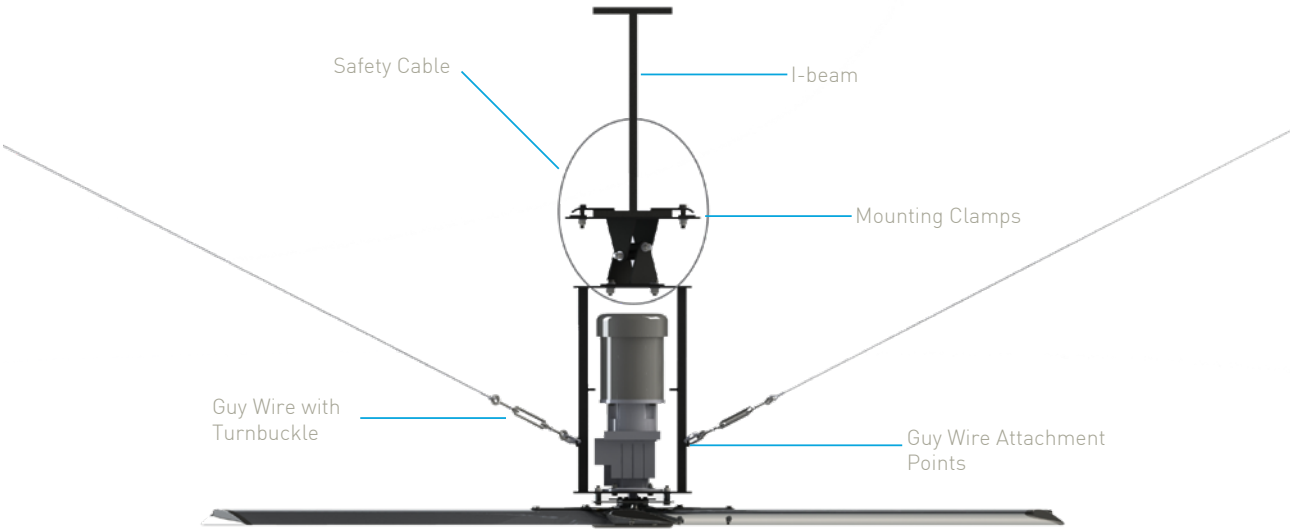

INSTALLATION OVERVIEW - GLULAM

- The Safety Cable needs to be fed through a hole in the Glulam, preferably above the center line of the Glulam.
- The Control Panel must be secured to the Glulam via wood screws within 25 feet of the fan, but 5 feet outside of the swept area.
- The Glulam Brackets need to be through-bolted to the Glulam as high as possible.

  Toll Free: 866 668 3247 Fax: 909 890 2313 www.macroairfans.com Rev. Date 030218

GLULAM UNIVERSAL MOUNT

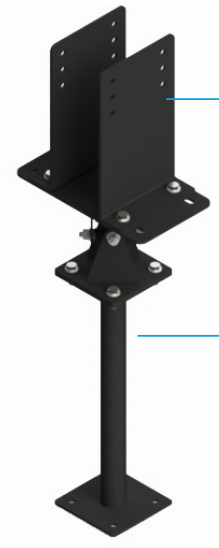

- Attach the glulam brackets to the top of the Universal Mount at a width that is wide enough to accommodate the glulam (the glulam brackets are adjustable as shown in the illustration above).
- Attach the extension to the bottom of the Universal Mount with provided hardware pack.
- Attach the glulam brackets to the glulam via 1/2" grade 5 bolts (long enough to go through the entire beam with nylon lock nuts).

GLULAM UNIVERSAL MOUNT (cont.)

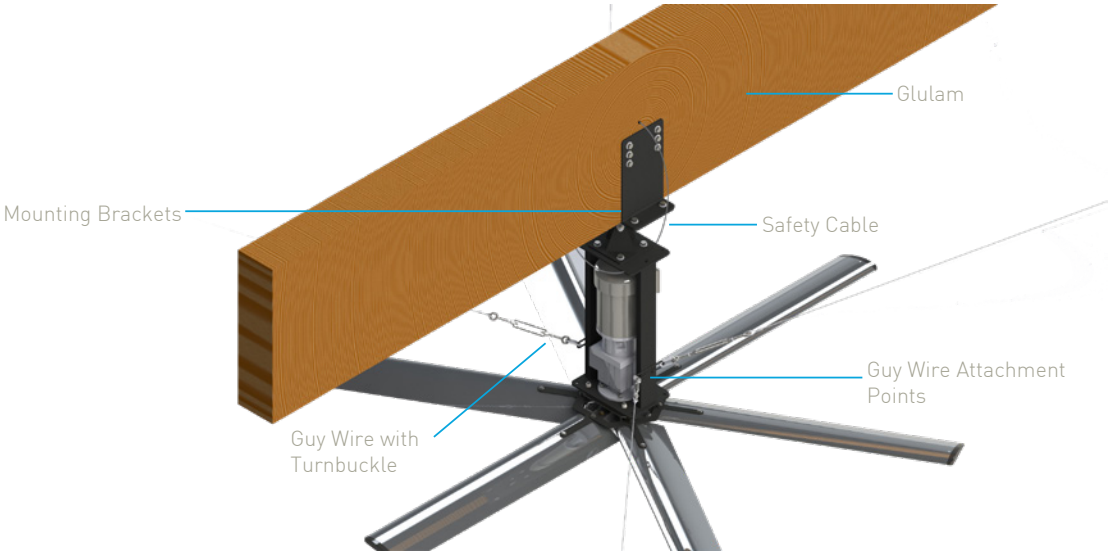

- Attach the glulam brackets to the glulam and attach the top of the fan frame to the bottom of the extension with the provided hardware.
- The highest bolt hole should not be below the beam's center line unless the glulam is too tall.

  Toll Free: 866 668 3247 Fax: 909 890 2313 www.macroairfans.com

GLULAM UNIVERSAL MOUNT (cont.)

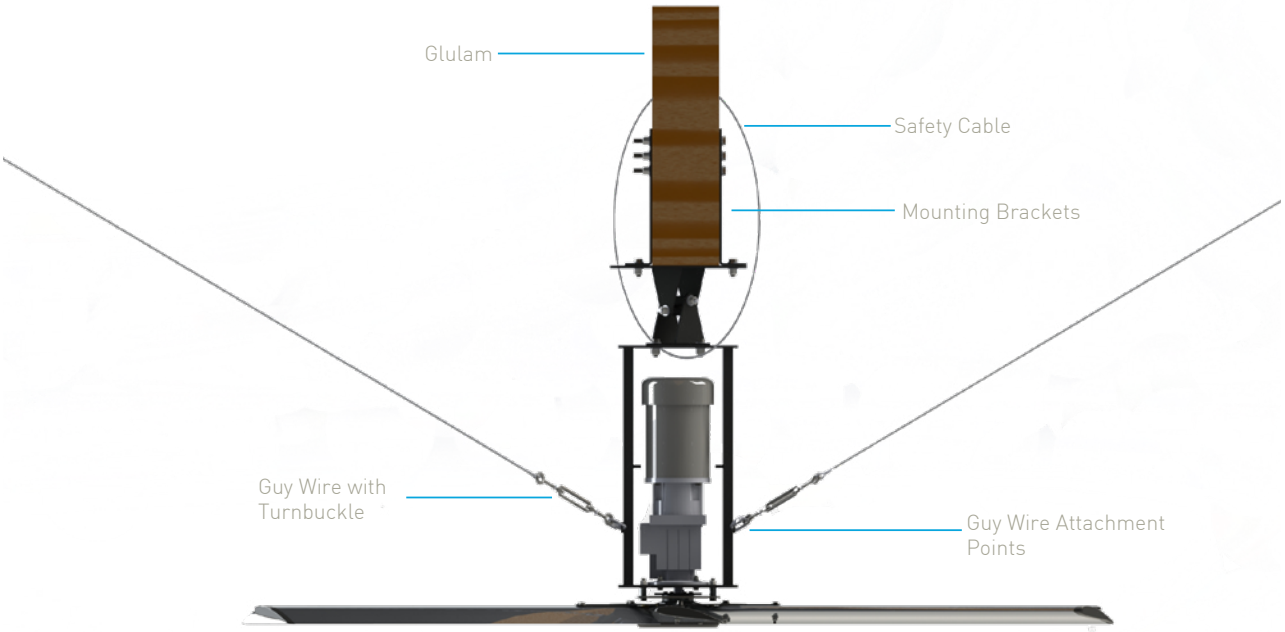

SPAN MOUNT

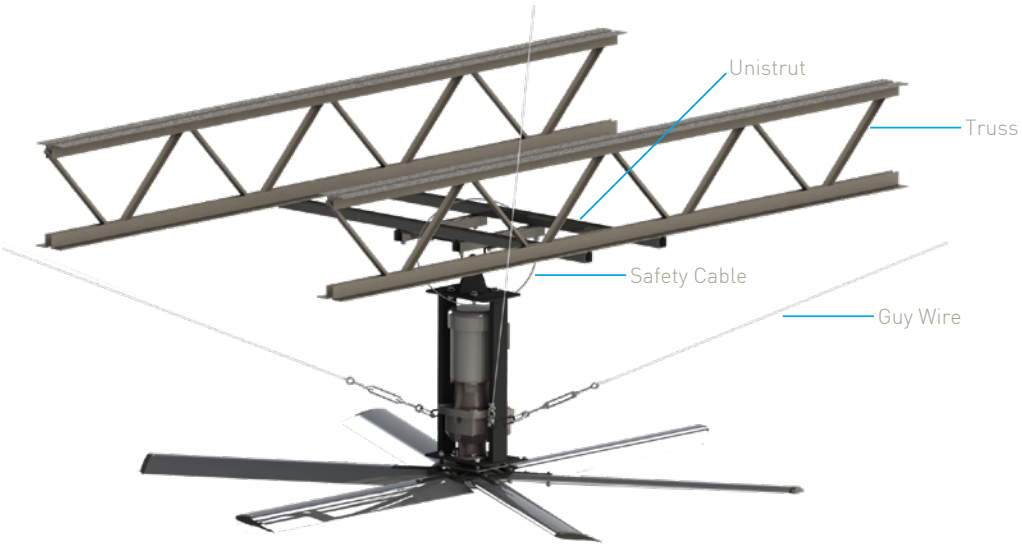

- Two (2) pieces of 1-5/8'' x 1-5/8'' 12 Gauge Unistrut need to span the trusses approximately 14'' apart from each other. Maximum allowable distance between trusses is 8'.
- The two shorter pieces of 1-5/8'' x 1-5/8'' 12 Gauge Unistrut need to be mounted at 90 degrees and spaced approximately 10'' apart from each other.
- Attach the UMH in the most desirable position between the trusses. 1/2'' bolts and 1/2'' Unistrut nuts are required. Unistrut clamps are not permitted in this mounting method.
- Attach the fan unit to the bottom of the UMH, followed by the blades and safety retainer links.

  Toll Free: 866 668 3247 Fax: 909 890 2313 www.macroairfans.com Rev. Date 030218

GUY WIRE INSTALLATION

GUY WIRE INSTALLATION

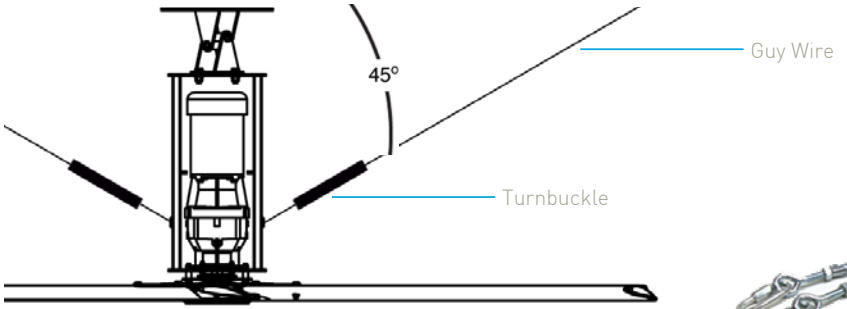

- Attach the turnbuckle end of the guy wires to the guy wire loops located on the fan frame with the provided quick links.
- When laying out the locations of the guy wire mounting points, attempt to maintain a 45 degree angle between the ceiling and the guy wires.
- Avoid any sharp edges that may contact the guy wire. Guy wires need to be attached to the building structure via 1/2" eye lags or bolts with the provided cable clamps.
- Do not wrap the guy wires around the building structure.

  Toll Free: 866 668 3247 Fax: 909 890 2313 www.macroairfans.com Rev. Date 030218

GUY WIRE TIGHTENING

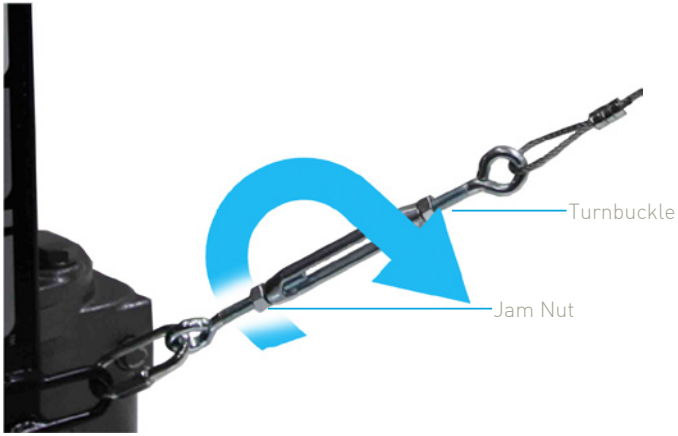

- With the aid of a level placed against the fan unit, tighten the turnbuckles by hand in a criss-cross pattern while periodically checking to ensure that the fan is level.
- Tighten the turnbuckles until the fan unit is stable in the level position. Make sure to **not overtighten** the turnbuckles.
- Once all of the guy wires are snug and the fan unit is stable and level, tighten the jam nuts on the turnbuckles.
- Do not use tools to tighten the turnbuckles; only use tools to tighten the jam nuts.

GUY WIRE BAND INSTALLATION

1. Insert the elastic cord through the top eyelet of each of the 4 turnbuckles as shown in pictures 1 & 2.

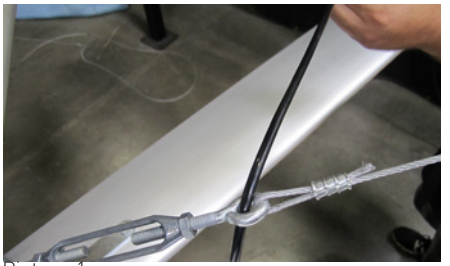

Picture 1

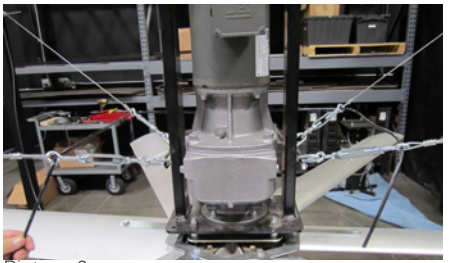

Picture 2

2. Pull one of the ends of the cord through one of the holes on the cable lock and then pull the end into the groove to lock it. Use pliers to properly secure the cord in the groove of the cable lock as shown in pictures 3 & 4.

Picture 3

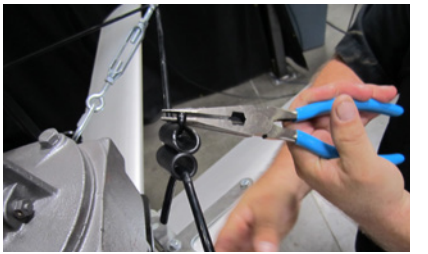

Picture 4

3. Repeat step 2 for the second end of the cord using the opposite hole and groove on the cable lock.

4. The safety cord should be pulled tight and fastened as shown in picture 5.

Picture 5

THE CABLE IS CUT TO A PREDETERMINED LENGTH AND TENSION.
DO NOT EXCESSIVELY STRETCH THE BUNGIE CORD.

  Toll Free: 866 668 3247 Fax: 909 890 2313 www.macroairfans.com Rev. Date 030218

BLADE INSTALLATION

BLADE & SAFETY LINK ASSEMBLY

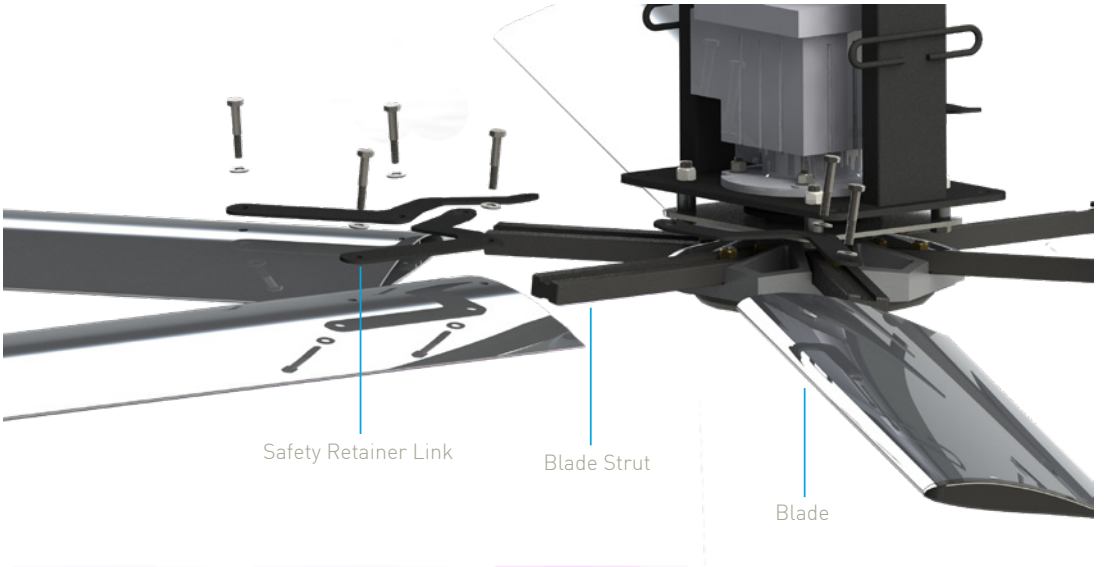

- Slide the blades onto the blade struts and align the holes in the blade and the blade struts.
- Once all of the blades are in place, install the safety retainer links with blade hardware in a clockwise or counterclockwise manner. Overlap each safety retainer link with the previous safety retainer link.
- Install the provided blade bolts with washers on both sides and torqued to 23 Ft-Lbs.

  Toll Free: 866 668 3247 Fax: 909 890 2313 www.macroairfans.com

BLADE & SAFETY LINK ASSEMBLY

The image above represents the correct installation of the blade and safety retainer links.

ELECTRICAL & SAFETY CABLE INSTALLATION

WARNING!

MOTOR CABLES AND INCOMING POWER MUST NEVER BE RUN IN THE SAME CONDUIT. FAILURE TO INSTALL PER MACROAIR INSTRUCTIONS, INCLUDING WIRING, MAY BE HAZARDOUS, CAUSE PREMATURE FAILURE, AND VOID THE MANUFACTURER'S WARRANTY.

Regulatory Notice: EMI | Electromagnetic Interference

Electromagnetic Interference (EMI) is any signal or emission, radiated in free space or conducted along power or signal leads, that endangers the functioning of radio navigation or other safety services or seriously degrades, obstructs, or repeatedly interrupts a licensed radio communications service. Radio communications services include but are limited to AM/FM commercial broadcast, television, cellular services, radar, air-traffic control, pagers, and personal communications services (PCS). These licensed services, along with unintentional radiators such as digital devices, variable frequency drives (VFDs), and other equipment such as fans with VFDs, contribute to the electromagnetic environment.

Electromagnetic compatibility is the ability of items of electronic equipment to function properly together in the electronic environment. MacroAir Fans variable frequency drives, VFDs, are designed to be in compliance with regulatory agency limits for EMI. However, there is no guarantee that interference will not occur in a particular installation. If MacroAir's products (fans) do cause interference with radio communications services, which can be determined by turning the fans off and on, please notify MacroAir technical support.

MacroAir Technologies' products are designed, tested, and classified for their intended electromagnetic environment. These electromagnetic environment classifications generally refer to the following harmonized definitions:

Class A is typically for business or industrial environment.

Class B (MacroAir products are **NOT** designed for typical residential environments covered under this classification).

CODE COMPLIANCE IS THE RESPONSIBILITY OF THE INSTALLER AND, ULTIMATELY, THE END USER. All wiring should conform to the National Electric Code (NEC) 2005, ANSI/NFPA 70-1999, and all local codes. This fan control should only be installed by qualified technicians familiar with the requirements of the NEC and local codes.

Note: MacroAir Technologies has a policy of continuous product improvement and reserves the right to change the design and specifications without notice.

If you have any questions, please contact MacroAir technical support.

CONTROL PANEL OVERVIEW

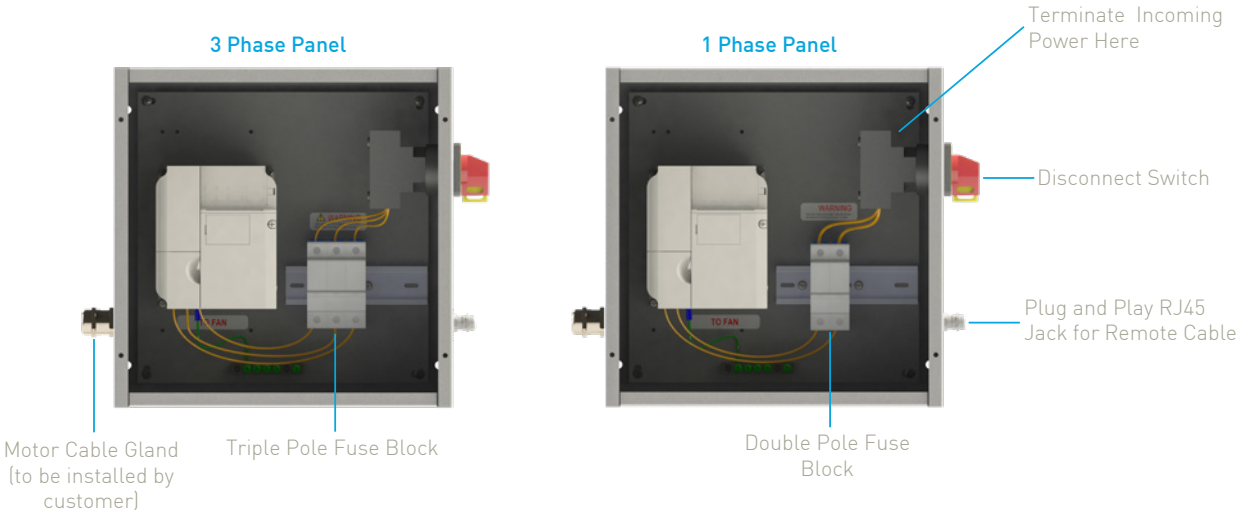

- Control Panels come pre-wired, as illustrated above.
- Analog Remote wiring is the responsibility of the customer. A schematic on the inside door of the panel illustrates proper termination.
- The Motor Cable Gland and Analog Remote Cable Gland do not come pre-installed. A unibit is required to drill the holes and install them.
- 25 feet of shielded motor cable is provided and must be used with no additional cable to maintain factory warranty.
- Motors are shipped pre-wired for high voltage. For 120V and 208-240V applications, it is the responsibility of the installer to rewire motors for low voltage according to the wiring diagram on the motor.

DIGITAL CONTROL PANEL SCHEMATIC

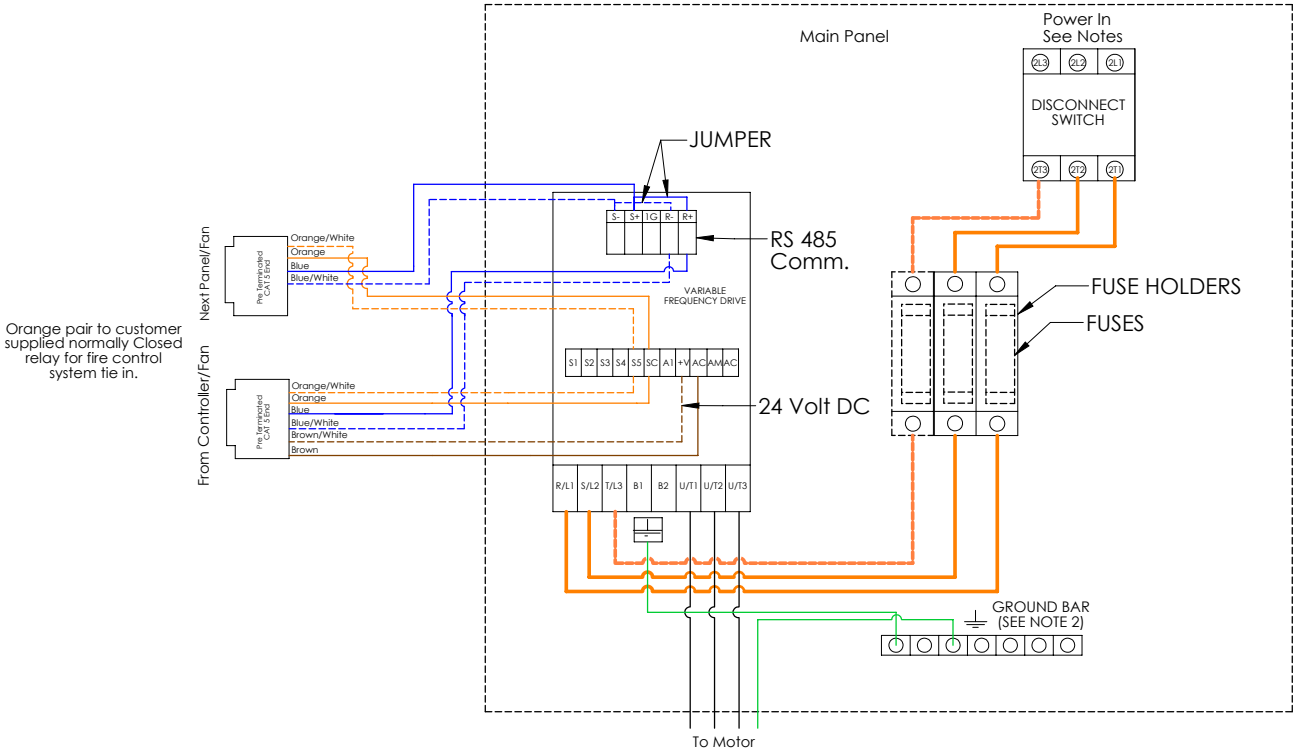

  Toll Free: 866 668 3247 Fax: 909 890 2313 www.macroairfans.com Rev. Date 030218

MacroAir engineers of air™

ANALOG CONTROL PANEL SCHEMATIC

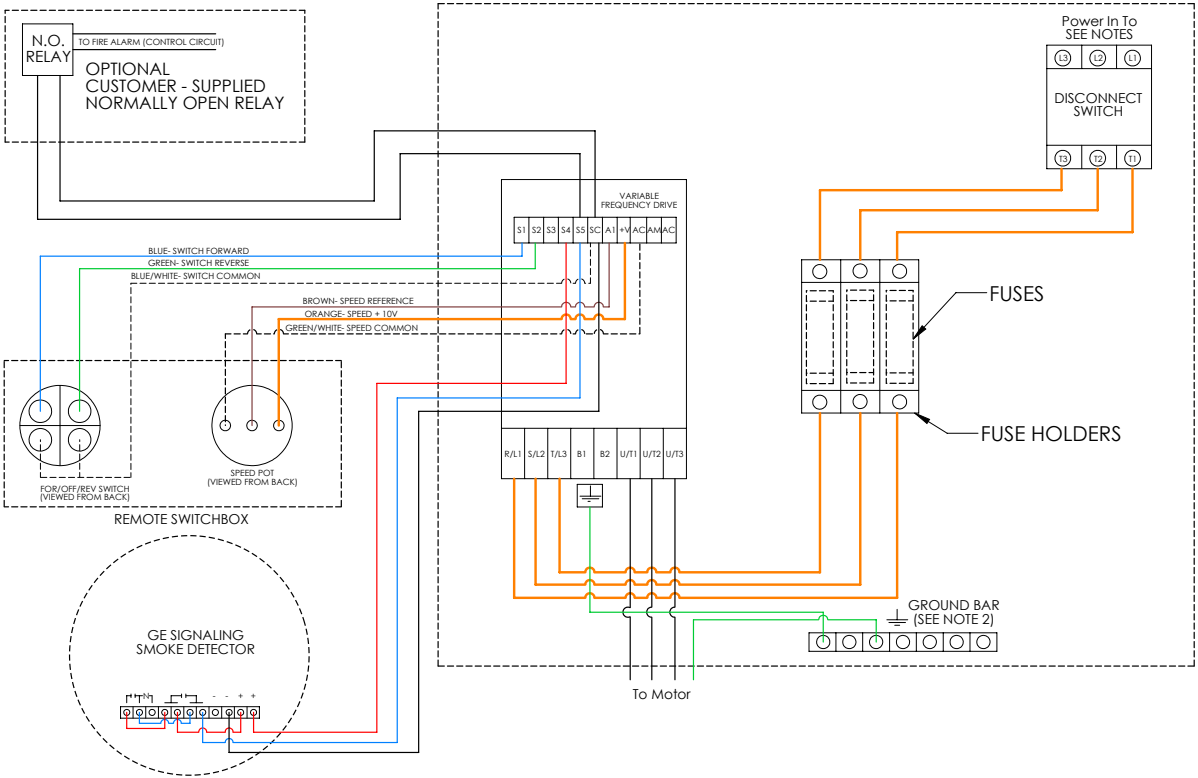

TOUCHPAD REMOTE USER INTERFACE

Buttons:

A - Forward / Reverse: Select fan rotational direction
B - Power Button: Turn the fan on or off (forward or reverse must be chosen to start the fan)
C - Speed Up / Speed Down: Increase or decrease the speed of the fan
D - Speed Box: Real-time indication of fan speed
E - Navigation: Navigate to the next screen
F - Settings: Displays settings and information about the fan

  Toll Free: 866 668 3247 Fax: 909 890 2313 www.macroairfans.com Rev. Date 030218

TOUCHPAD REMOTE INSTALLATION

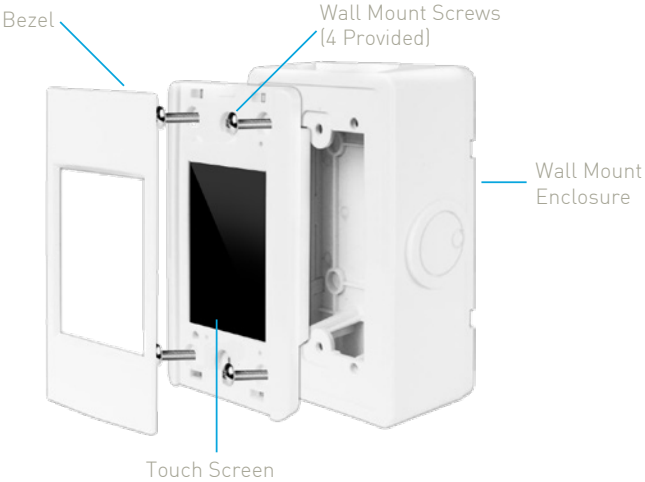

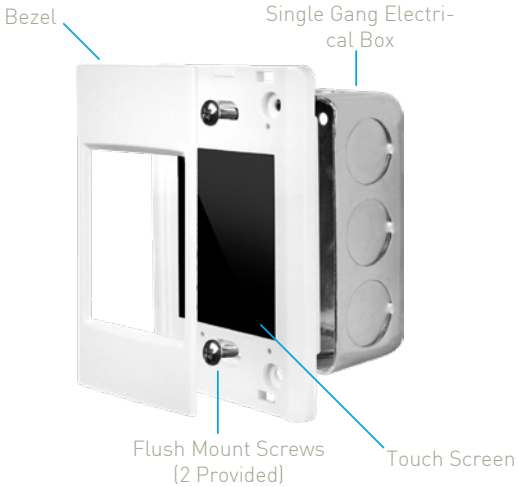

Wall Mounting (Provided)

1. Mount the base plate of the enclosure to the wall using the 4 provided wall anchors and screws.
2. Snap the front of the enclosure to the base plate.
3. Plug in the pre-wired CAT5e cable from the screen into the RJ45 coupler inside the enclosure.
4. Secure the touch screen to the enclosure using the 4 provided screws.
5. Lock the provided bezel into place via the plastic tabs.
6. Plug the provided CAT5e cable from the fan into the RJ45 on the outside of the enclosure.

Flush Mounting (Not Provided)

1. Install the single gang electrical box (not provided).
2. Run the provided CAT5e cable from the fan into the single gang electrical box.
3. Plug the remote cable into the pre-wired CAT5e cable from the screen using the provided RJ45 coupler.
4. Secure the touch screen to the enclosure using the 2 provided screws.
5. Lock the provided bezel into place via the plastic tabs.

TOUCHPAD REMOTE LCD DISPLAY

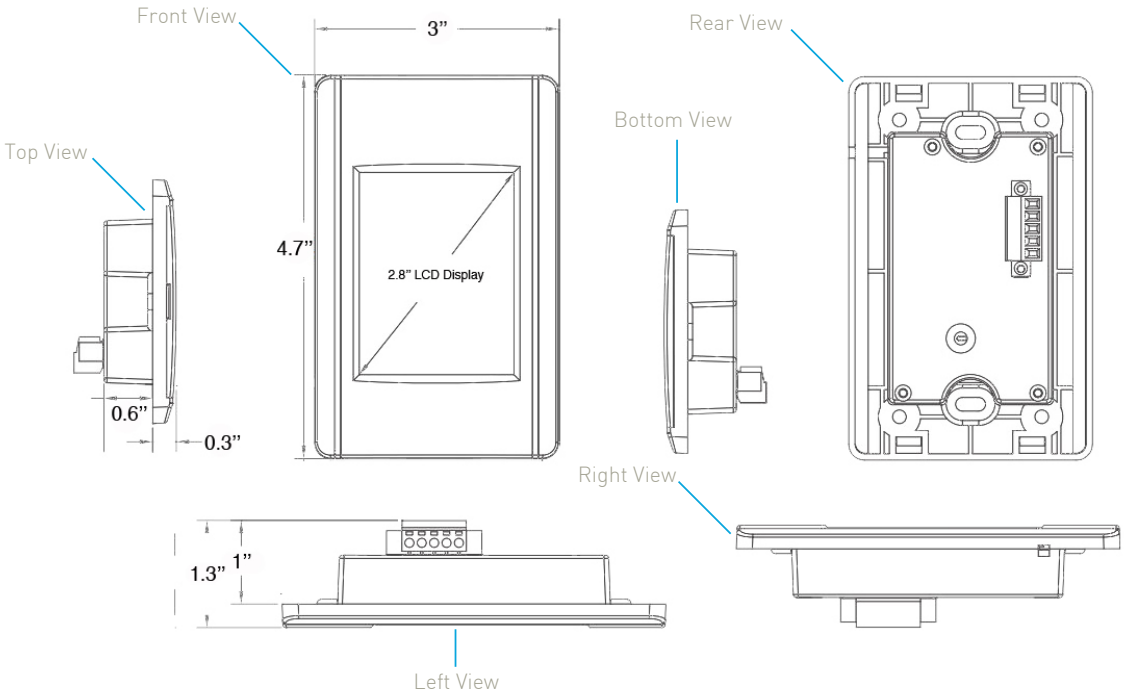

  Toll Free: 866 668 3247 Fax: 909 890 2313 www.macroairfans.com Rev. Date 030218

MacroAir engineers of air™

TOUCHPAD REMOTE ENCLOSURE

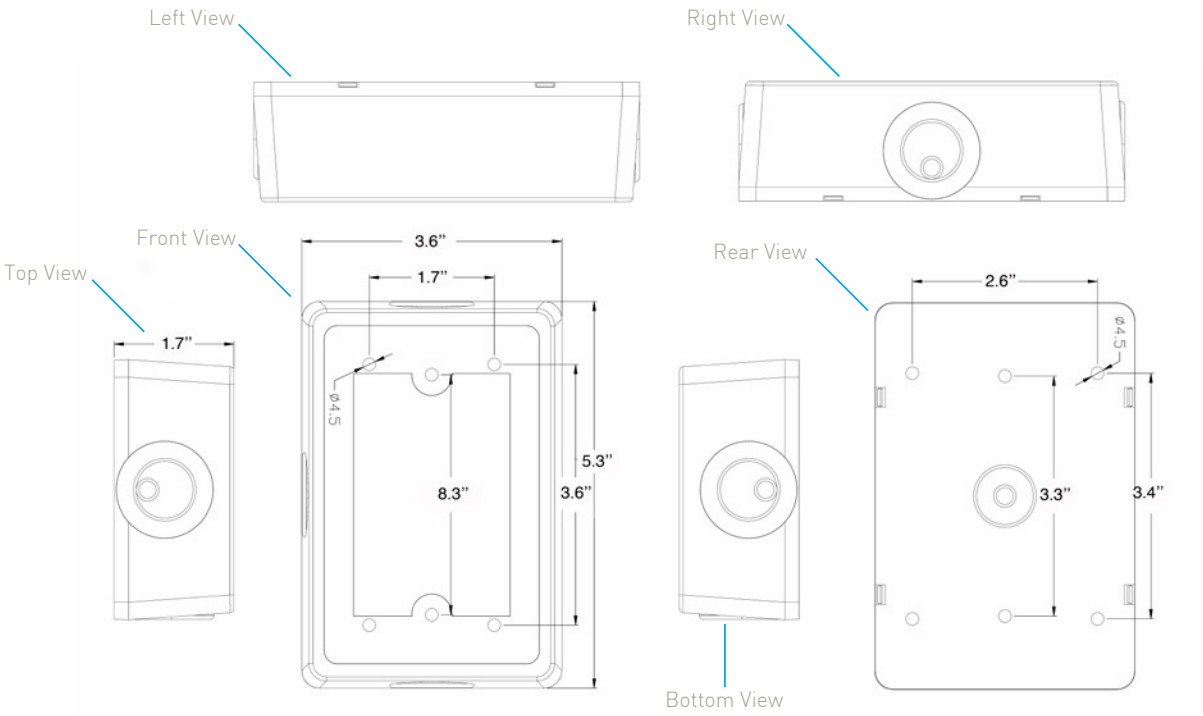

MAINTENANCE INFORMATION

Guy Wire Check (if applicable): Checking a MacroAir fan's guy wires for tension and inspecting for frayed sections could mitigate a problem before it occurs. The guy wires should be under enough tension to prevent any movement in the motor unit or the extension tube. If the motor can be moved by pushing on it, the guy wires need to be tightened. Fan owners should confirm that the guy wires are not wrapped around any sharp edges. MacroAir recommends attaching guy wires to the building with eye bolts or eye lags. If they are not already installed with eye bolts or lags, we urge fan owners to install these in order to help keep the guy wires from fraying. If guy wires are installed with turnbuckles, jam nuts should periodically be checked to ensure tightness. If they are loose, the guy wire cables may need to be re-tensioned.

Airfoil Cleaning: Depending on the type of commercial application the MacroAir fan is in, there can be quite a bit of dust or other particulates that cling to the fan's airfoils. While this may not affect fan performance, we recommend fan owners keep airfoils clean by having a maintenance person or skilled trade professional – who has experience using a lift – wipe the fan airfoils with a rag or sponge using hot water or regular cleaning solutions. Please do not use chlorine or any chemicals containing chlorine.

Safety Cable Check: Each MacroAir fan comes with a safety cable. Depending on the fan model, the safety cable either wraps around the building structure and the fan frame, or comes out of the top of the fan and wraps around the building structure. The safety cable is an important part of the safety system and acts as a last resort should an earthquake, collision, or similar catastrophic event occur. As such, it's vital for fan owners to ensure that it is intact and properly secured.

Reverse Operation: The beauty of MacroAir HVLS fans is that they are built to run in forward and reverse mode. However, changing the direction of your fan can put initial stress on the fan if it has not been properly checked. It is a good idea to make sure guy wires, safety cables and all bolts and nuts are tight. Cleaning the fan before switching directions will prevent dust and other particles from falling off the fan airfoils when turning in the opposite direction.

Maintenance Plan:

Things to look for include: properly torqued fasteners, rust, cracked welds, unusual noise, hub migration/movement, guy wire loosening or movement.

Year 1-10:
One inspection on lift per year.

Year 11 and beyond:
Annual inspections from a lift and seasonal inspections both before and after the busy season from the ground.

NOTE: If there are issues or concern discovered during an inspection, please contact the service and technical support department at MacroAir for help.

CONTACT US

For installation assistance, application questions, technical sales support & any other inquiries, please contact us at **(866) 668-3247**.

WARRANTY INFORMATION

To register your fans, go to macroairfans.com/register.

MACROAIR 12-YEAR SERVICE LIFE PRORATED LIMITED WARRANTY
MacroAir Technologies, Inc.

WARRANTOR: The warrantor for the limited warranties set forth herein is MacroAir Technologies Inc. ("MacroAir").

LIMITED WARRANTY: This prorated limited warranty (this "Warranty") applies only to the original End-User (the "End-User") of any MacroAir Technologies' Three or Six Blade Fan(s) (individually and collectively, the "Product") and cannot be transferred. This Warranty applies even in the event that the Product is initially sold by MacroAir for resale to an End-User.

WHAT THIS WARRANTY COVERS: In addition to the Lifetime Warranty on blades, hub, and frame; and the 3-Year Non-prorated Warranty, MacroAir warrants that the Product will have a "service life" (defined below) of Twelve Years from the date of purchase (the "Twelve-Year Service Life") when used in accordance with the operation and maintenance procedures prescribed in the MacroAir Installation and Owners Manuals. If MacroAir finds, in its sole discretion, that any Product has not provided the Twelve-Year Service Life, MacroAir will, as its sole obligation and the End-User's sole remedy for MacroAir's breach of this warranty, repair or replace the Product, at its option, F.O.B. MacroAir's factory, for a charge, payable by the End-User to MacroAir prorated on the following basis:

The End-User will be allowed a credit against the MacroAir's list price of equivalent equipment at the time of return of the Product to MacroAir, in proportion to the percentage of Twelve-Year Service Life remaining at the time of return of the Product to MacroAir. The End-User will assume responsibility to pay the balance of the list price; and MacroAir reserves the right to require payment prior to delivery of the repaired or replacement equipment.

For the avoidance of doubt, MacroAir's responsibilities under this Warranty are as follows:

Lifetime - Product repaired or replaced - Applies to Blades, Hub, and Frame, as described therein
3-Year Limited Non-Prorated Warranty – Product repaired or replaced - Applies to all Product components, as described therein
Year 4-12 - Unit Credit ($) = Current List Price X Years of Unexpired Service Life
---
12 Years of Warranted Service Life

SERVICE LIFE: A MacroAir fan's service life is its expected lifetime, or the acceptable period of use in service. It is the time that a MacroAir fan can reasonably be expected to be 'serviceable' or supported by MacroAir.

WHAT THIS LIMITED WARRANTY DOES NOT COVER: This Warranty does not cover any defects or damages caused by: (a) failure to properly store the Product before installation; (b) shipping and delivery of the Product if shipping is FOB Factory; (c) neglect, accident, abuse, misuse, misapplication, or incorrect installation; (d) repair or alteration not authorized in writing by MacroAir personnel or performed by an authorized MacroAir Customer Service Engineer or Agent; (e) improper testing, operation, maintenance, adjustment, or modification of any kind not authorized in writing by MacroAir personnel or performed by an authorized MacroAir Customer Service Engineer or Agent; or (f) use of the Product under other than normal operating conditions or in a manner inconsistent with the Product's labels or instructions.

This Warranty is not valid: (a) unless the End-User returns to MacroAir the Warranty Registration Card or registers online within thirty (30) days of purchase; or (b) if the Product's serial numbers have been removed or are illegible. Any Warranted Items repaired or replaced pursuant to this Warranty will be warranted for the remaining portion of the original Warranty subject to all the terms thereof. MacroAir shall not be responsible for any charges for testing, checking, removal or installation of Warranted Items not authorized in writing by MacroAir personnel or performed by an authorized MacroAir Customer Service Engineer or Agent.

LIMITATION OF LIABILITY: The remedies of the End-User set forth herein are exclusive and are the sole remedies for any failure of MacroAir to comply with its obligations hereunder. In no event shall MacroAir be liable in contract, in tort (including negligence or strict liability) or otherwise for damage to property or equipment other than the Products, including loss of profits or revenue, loss of use of Products, cost of capital, claims of customers of the End-User or any special, indirect, incidental or consequential damages whatsoever. The total cumulative liability of MacroAir hereunder whether the claims are based in contract (including indemnity), in tort (including negligence or strict liability) or otherwise, shall not exceed the price of the Product on which such liability is based. MacroAir shall not be responsible for failure to provide service or parts due to causes beyond MacroAir's reasonable control.

END-USER'S OBLIGATIONS: In order to receive the benefits of this Warranty, the End-User must use the Product in a normal way; follow the Product's Installation and Owners Manuals; and protect against further damage to the Product if there is a covered defect.

OTHER LIMITATIONS: MacroAir's obligations under this Warranty are expressly conditioned upon receipt by MacroAir of all payments due to it (including interest charges, if any). During such time as MacroAir has not received payment of any amount due to it for the Product, in accordance with the contract terms under which the Product is sold, MacroAir shall have no obligation under this Warranty. Also during such time, the period of this Warranty shall continue to run and the expiration of this Warranty shall not be extended upon payment of any overdue or unpaid amounts.

COSTS NOT RELATED TO WARRANTY: The End-User shall be invoiced for, and shall pay for, all services not expressly provided for by the terms of this Warranty, including without limitation, site calls involving an inspection that determines no corrective maintenance is required. Any costs for replacement equipment, installation, materials, freight charges, travel expenses or labor of MacroAir representatives outside the terms of this Warranty will be borne by the End-User.

OBTAINING WARRANTY SERVICE: Call MacroAir Technologies Inc., Customer Service Department at 909.890.2270. MacroAir will not accept any product for return, credit or exchange unless expressly authorized by MacroAir in writing and delivered FOB MacroAir factory with proper Return Authorization Number attached to the product.

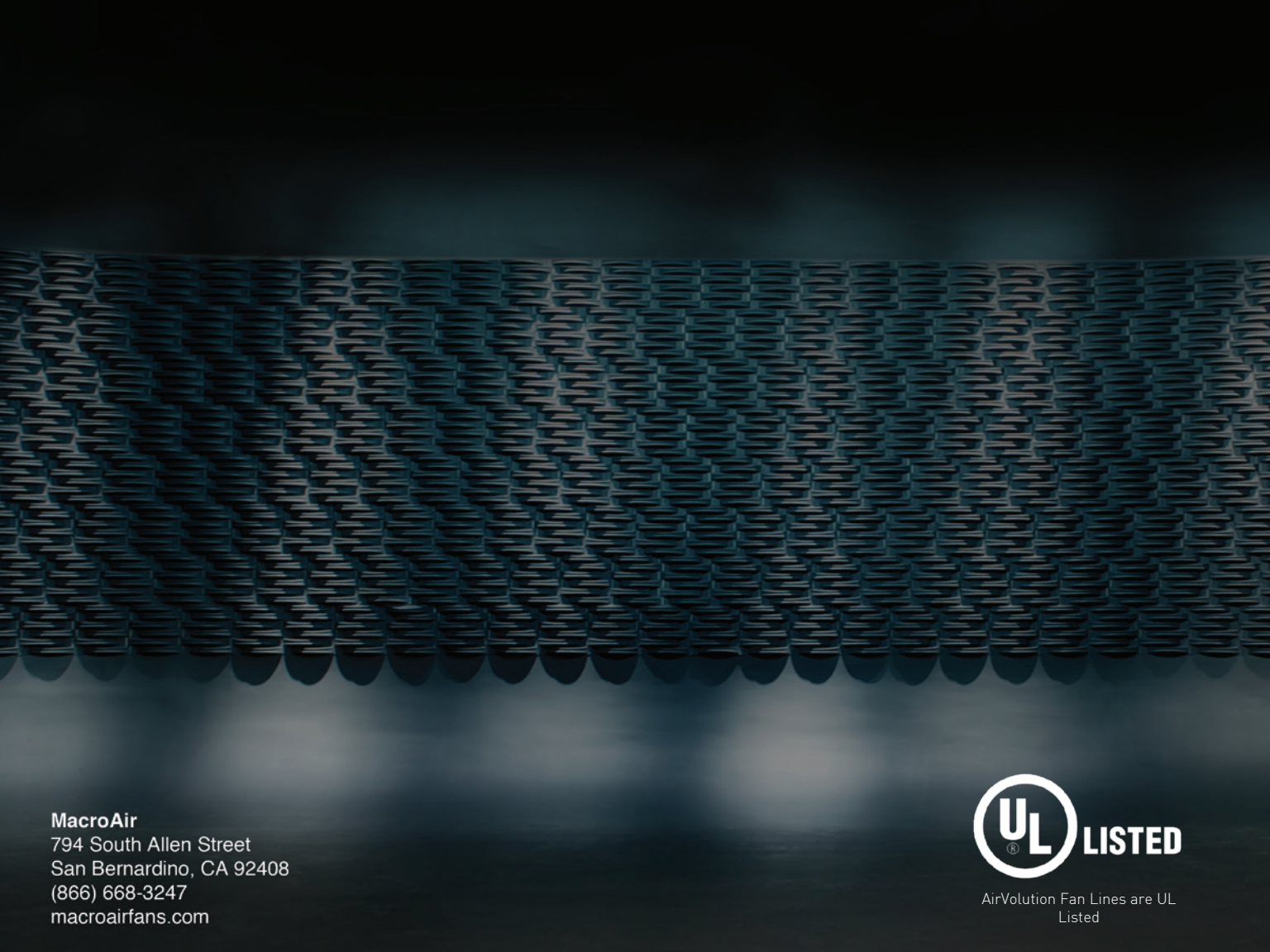

MacroAir
794 South Allen Street
San Bernardino, CA 92408
(866) 668-3247
macroairfans.com

UL LISTED

AirVolution Fan Lines are UL Listed